# ASSEMBLY INSTRUCTION
# MESSINA LOUNGETABLE 96X55X40CM,BLUE

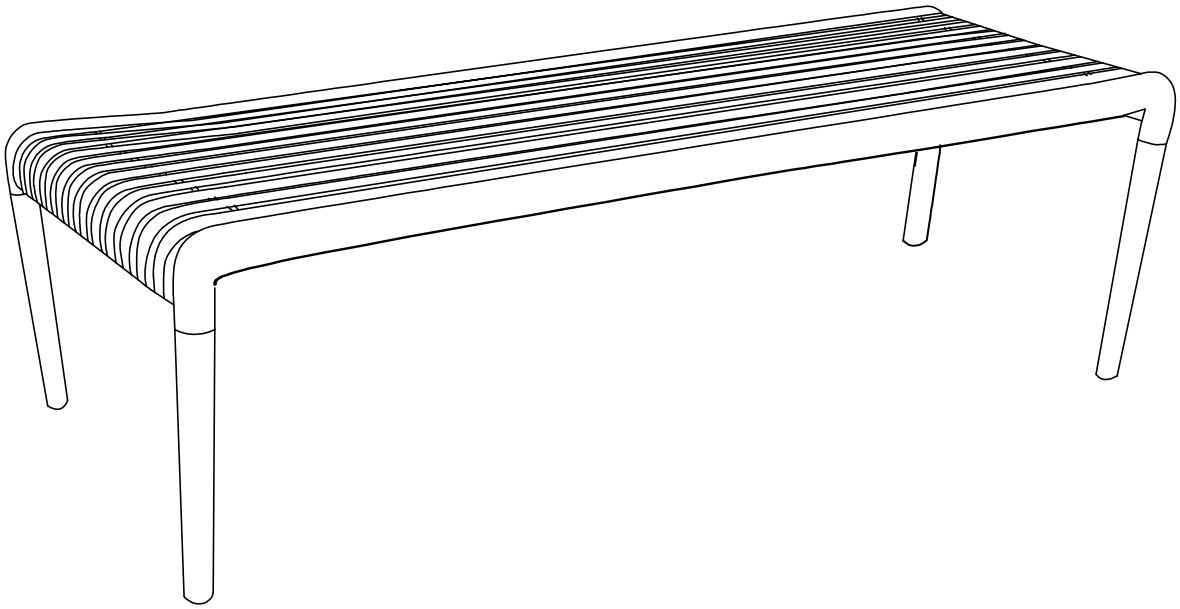

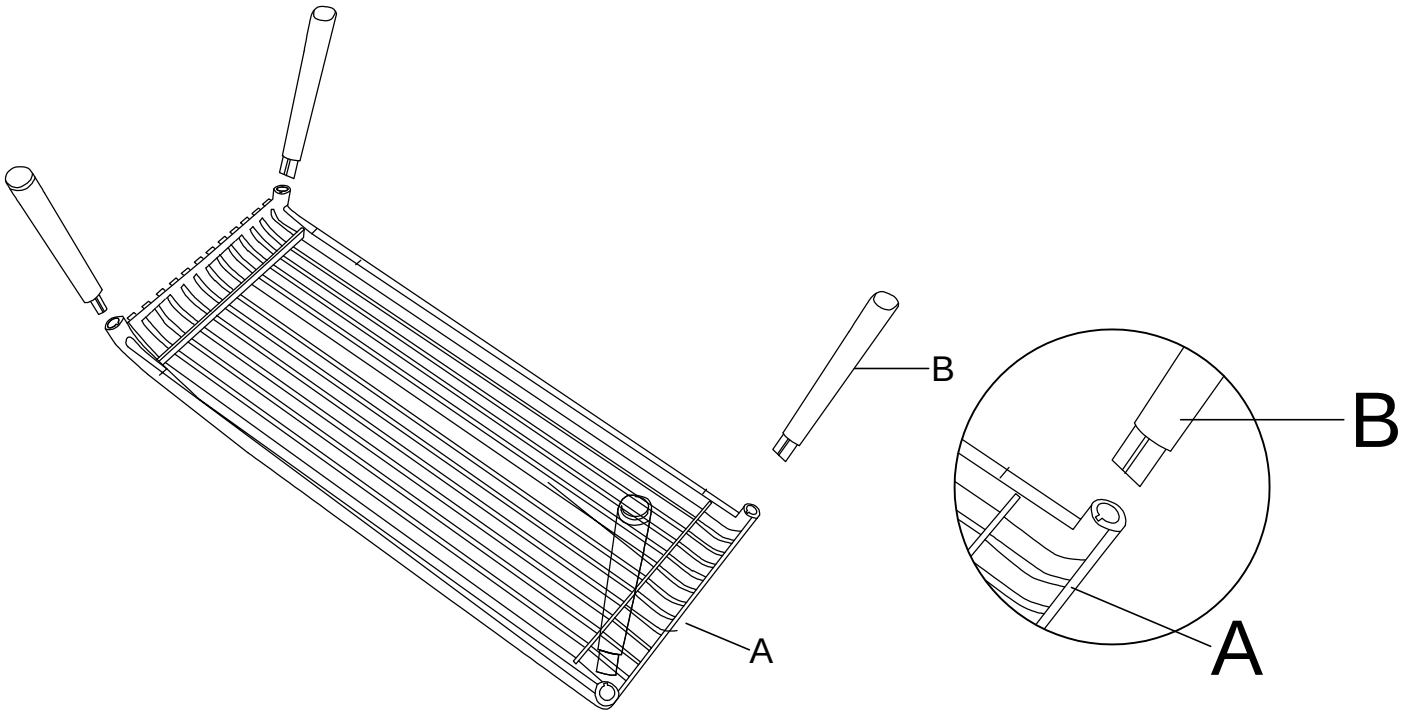


Ax1PC

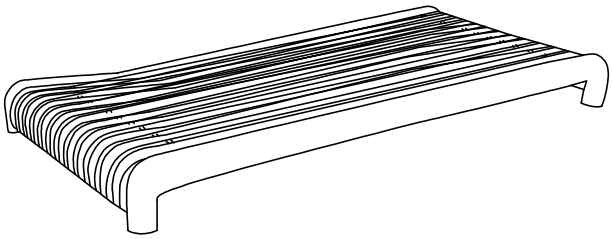

Bx4PCS

