ASSEMBLY INSTRUCTIONS

Step 1: Unpack Base Frame

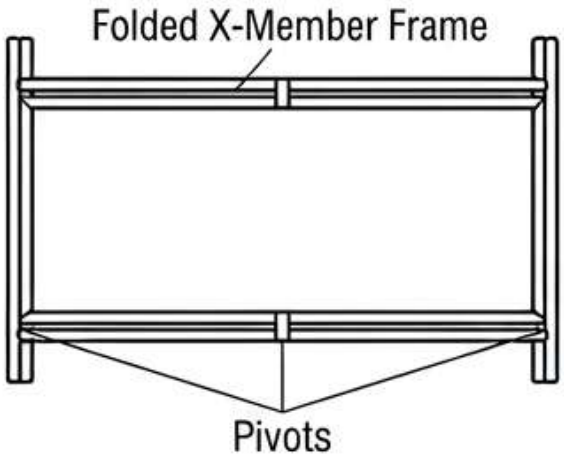

Step 2: Unfold Base Frame

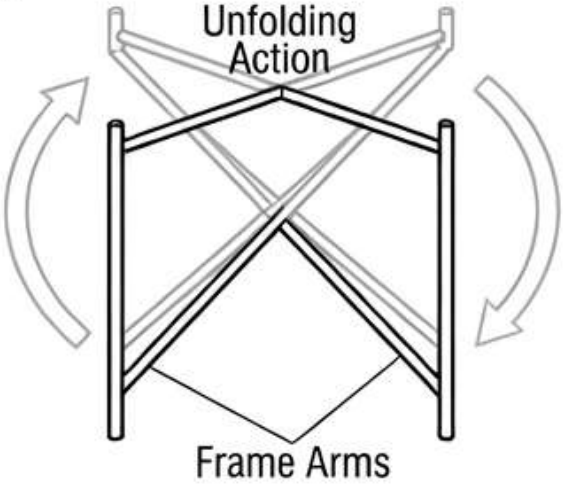

Step 3: Secure and Orient Base

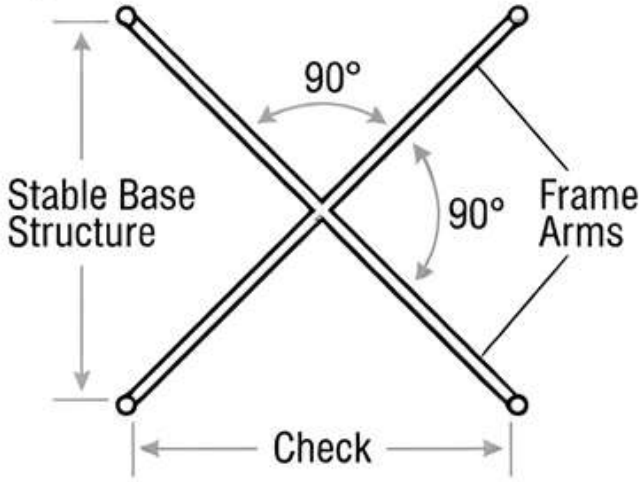

Step 4: Prepare Marble Top

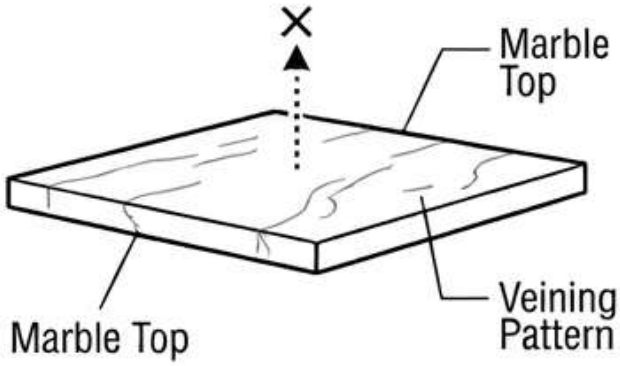

Step 5: Attach Marble Top



Step 6: Final Table Assembly

Check



Weight capacity - 20 to 30 kg